THIS DRAWING IS UNPUBLISHED. RELEASED FOR PUBLICATION -,- .
© COPYRIGHT - By - ALL RIGHTS RESERVED.

REVISIONS

P	LTR	DESCRIPTION	DATE	DWN	APVD
	C	REVISED PER ECR-16-013330	20APR2017	BW	RS

NOTES:

1. SINGLE PACK IN ACCORDANCE WITH AMP SPEC 107-3275
2. 100 TRAY PACK IN ACCORDANCE WITH AMP SPEC 107-3275
3. Ag PLATING
4. THIS ITEM MUST BE WHITE
5. REFERENCE INSTRUCTION SHEET : 411-3274

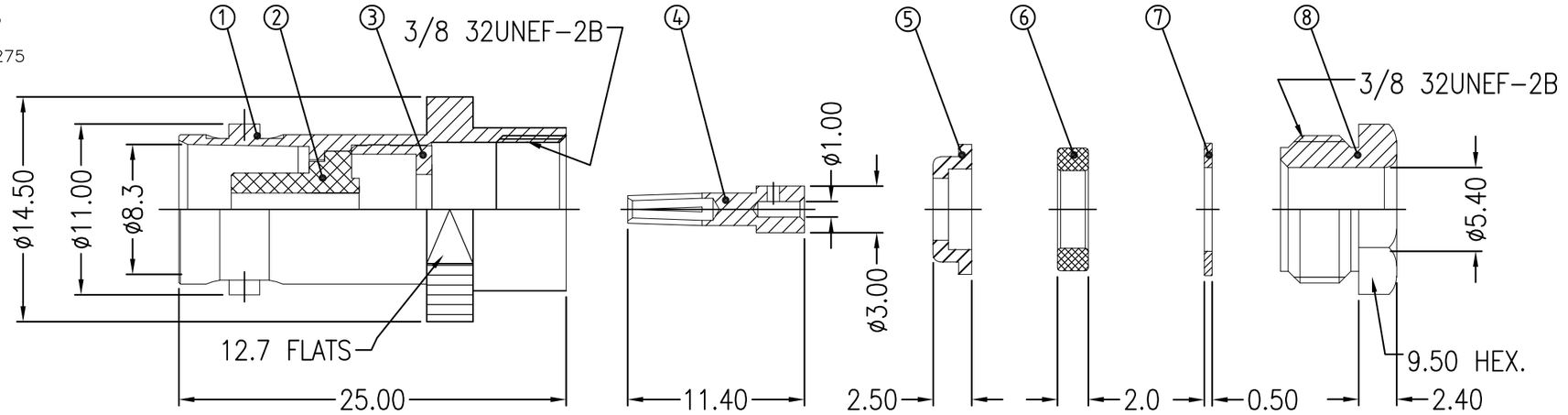

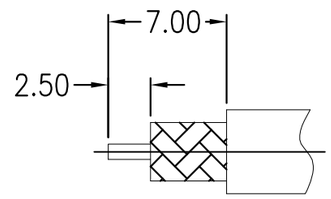

RECOMMENDED CABLE STRIPPING DIM'S

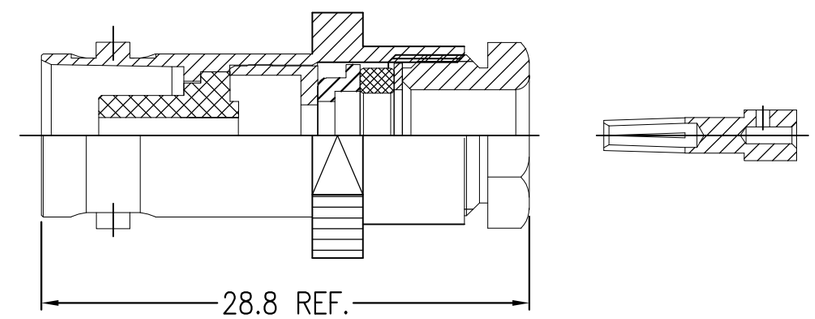

ASSEMBLY DIAGRAM

QUANTITY PER ASSY		PARTS LIST		
6--0	1--0	MATERIAL	DESCRIPTION	ITEM
1	1	BRASS (3)	NUT	8
1	1	BRASS (3)	WASHER	7
1	1	SILICON RUBBER (4)	GASKET	6
1	1	BRASS (3)	LOCK RING	5
1	1	PHOSPHOR BRONZE (3)	CONTAT	4
1	1	BRASS (3)	RING	3
1	1	PTFE	INSULATION	2
1	1	BRASS (3)	BODY	1

THIS DRAWING IS A CONTROLLED DOCUMENT.

DIMENSIONS: mm

TOLERANCES UNLESS OTHERWISE SPECIFIED:
0 PLC ± -
1 PLC ± -
2 PLC ± -
3 PLC ± -
4 PLC ± -
ANGLES ± -

MATERIAL -

FINISH -

DWN BILL WONG 20APR2017
CHK ROGER SONG 20APR2017
APVD ROGER SONG 20APR2017
PRODUCT SPEC —
APPLICATION SPEC —
WEIGHT 0

TE Connectivity

NAME
BNC STRAIGHT JACK SOLDER(PS) RG58 50 OHM
—
—

SIZE	CAGE CODE	DRAWING NO	RESTRICTED TO
A3	00779	C-1478409	—

CUSTOMER DRAWING

SCALE	SHEET	REV
1:1	1 OF 1	C